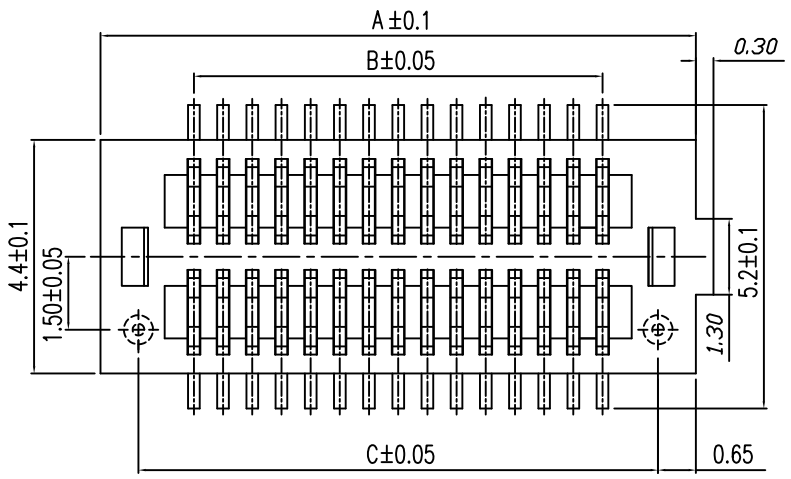

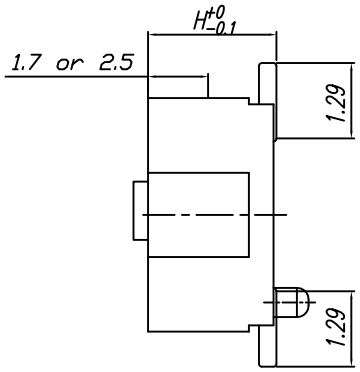

ORDER INFORMATION

NR05 – S – HXX – XX

Series

Base Height

No. of pos

P : Plug
S : Socket

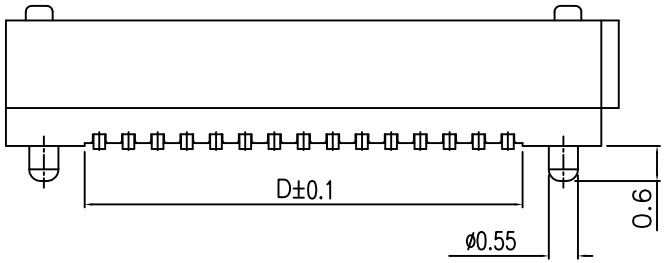

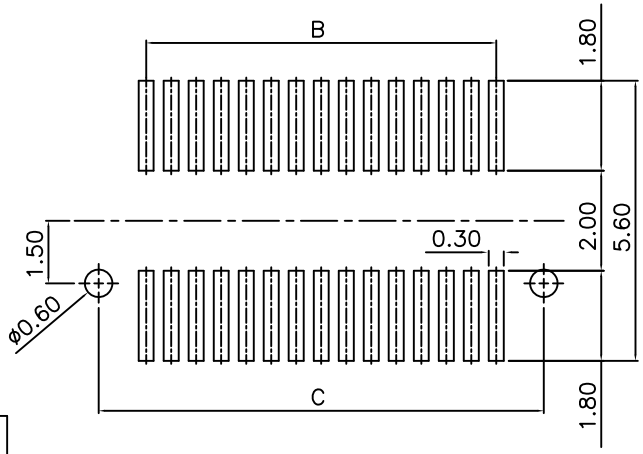

P.C.B PATTEN

	A	B	C	D
8P	4.70	1.50	3.40	2.00
10P	5.20	2.00	3.90	2.50
12P	5.70	2.50	4.40	3.00
14P	6.20	3.00	4.90	3.50
16P	6.70	3.50	5.40	4.00
18P	7.20	4.00	5.90	4.50
20P	7.70	4.50	6.40	5.00
22P	8.20	5.00	6.90	5.50
24P	8.70	5.50	7.40	6.00
26P	9.20	6.00	7.90	6.50
28P	9.70	6.50	8.40	7.00
30P	10.20	7.00	8.90	7.50
32P	10.70	7.50	9.40	8.00
34P	11.20	8.00	9.90	9.00

	A	B	C	D
36P	11.70	8.50	10.40	9.00
38P	12.20	9.00	10.90	9.50
40P	12.70	9.50	11.40	10.00
42P	13.20	10.00	11.90	10.50
44P	13.70	10.50	12.40	11.00
46P	14.20	11.00	12.90	11.50
48P	14.70	11.50	13.40	12.00
50P	15.20	12.00	13.90	12.50
60P	17.70	14.50	16.40	15.00
70P	20.20	17.00	18.90	17.50
80P	22.70	19.50	21.40	20.00
90P	25.20	22.00	23.90	22.50
100P	27.70	24.50	26.40	25.00

HIGH	PLUG(H)	SOCKET(H)
3.0	0.8	2.2
3.5	1.3	2.2
4.0	1.0	3.0
4.5	1.0	3.5
5.0	1.0	4.0
5.5	1.0	4.5
6.0	2.0	4.0
6.5	2.0	4.5

MARK	DATE	REVISION	SIGN
5			
4			
3			
2			
1	2012.05		

THIRDANGLE PROJECTION | UNIT mm | SCALE N/S | TOLERANCE
APPROVAL | CHECK | DESIGN | DRAW

WK NAME	0.5mm SOCKET
PART NAME	0.5mm BOARD TO BOARD
DRAWG NO.	NR05-S

SHINHWA TECH